[UCI]I804:24011-200000264056

2013년 8월

석사학위논문

A Study on Detection of Wall-Thinned Defects Using IR Thermography in NPPs

조 선 대 학 교 대 학 원

원 자 력 공 학 과

김 주 현

A Study on Detection of Wall-Thinned Defects Using IR Thermography in NPPs

적외선열화상기술을 적용한 원전 배관 감육결함 검출에 관한 연구

2013년 8월 23일

조 선 대 학 교 대 학 원

원 자 력 공 학 과

김 주 현

A Study on Detection of Wall-Thinned Defects Using IR Thermography in NPPs

지도교수 나 만 균

이 논문을 공학 석사학위신청 논문으로 제출함

2013년 5월

조 선 대 학 교 대 학 원

원 자 력 공 학 과

김 주 현

김주현의 석사학위 논문을 인준함

위원장 조선대학교 교 수 김 진 원 (인)

위 원 조선대학교 교 수 송 종 순 (인)

위 원 조선대학교 교 수 나 만 균 (인)

2013년 5월

조 선 대 학 교 대 학 원

CONTENTS

List of Figures

List of Tables

초 록

적외선열화상기술을 적용한 원전 배관 감육결함 검출에 관한 연구

김 주 현
지도 교수 : 나 만 균
원자력공학과
조선대학교 대학원

최근 장기가동으로 노후화된 원전의 수가 증가하고 있고, 그에 따라 원전 2차계통 설비의 문제로 인한 발전정지 사례가 증가하고 있다. 이러한 사례들은 피로, 부식, 감육 등에 의해 원전 2차계통의 각종 구조물에서 발생한다. 그 중 감육결함은 배관 내부 유체의 유동에 의한 부식의 가속화로 인해 발생하며, Cr 함량이 낮은 탄소강 배관에서 자주 발생한다. 이러한 감육결함은 사전 징후 없이 바로 손상으로 진행되고 모재부에서도 흔히 발생하며 배관의 건전성을 저하시키는 주요 원인 중 하나로 알려져 있다.

감육결함의 체계적인 관리를 위해서는 주기적인 검사가 필요하며, 특히 원전의 가동을 멈추지 않은 상태에서도 정밀검사가 요구된다. 대부분의 원전 2차계통 설비는 원자력발전소의 안전성과 직접적인 관련은 없으나 일부 기기는 고장 발생 시 출력 감소 또는 발전 정지로 이어져 경제적인 손실을 초래한다. 특히 원전 2차계통은 정상운전 중 운전원 또는 작업자들이 쉽게 접근하여 작업을 하는 곳으로 예상하지 못한 배관의 손상은 심각한 사회적 영향을 미치기 때문에 매우 중요하다. 그로인하여 주요설비에 대한 건전성 여부 확인을 위해 비파괴검사에 대한 관심이 고조되고 있고 비교적 안전하면서 빠르고 쉽게 측정할 수 있는 비파괴검사의 요구가 증대되고 있다.

현재 원전 2차계통에는 초음파검사, 와전류검사, 자기탐상검사 등 여러 가지 비파괴검사가 수행되고 있다. 이러한 비파괴검사는 적외선열화상기술을 포함하고 있다. 적외선열화상기술은 결함부와 미결함부의 온도차를 관찰하여 결함의 유무를 확인함으로써

기존의 비파괴검사에 대한 제약을 해결할 수 있을 것이고 현장에서의 활용도가 높을 것으로 예상된다.

따라서 본 연구에서는 원전 배관 내부의 감육결함을 검출하기 위하여 적외선열화상기술을 적용하였다. 적외선열화상기술을 적용하여 정상운전 중인 원전과 정비기간인 원전의 결함을 검출하기 위해서는 실제 원전과 비슷한 조건에서 시험이 수행되어야 한다. 이를 위하여 정비기간 중인 원전은 배관의 온도가 상온을 유지하므로 가열장치를 이용한 시험을, 정상운전 중인 원전은 배관의 온도가 고온을 유지하므로 냉각장치를 이용한 시험을 수행하였다. 가열 및 냉각장치를 이용한 시험에 앞서 본 연구에 적용 가능한 가열 및 냉각장치를 조사하고 검토하여 최적의 장치를 선정하여 가열 및 냉각 효과와 시험조건을 알아보기 위한 유한요소 해석을 수행하였다. 수치적인 기법을 사용하여 수행된 유한요소 해석을 통하여 각 장치들의 가열 및 냉각효과를 확인할 수 있었고, 시험조건을 알아볼 수 있었다. 유한요소 해석 결과를 적용한 가열 및 냉각시험은 인위적으로 결함을 가공한 배관 시험편의 결함을 검출하는 결과를 얻을 수 있었다. 가열장치를 이용한 시험에서는 정비기간의 원전에 적용하여 결함을 검출할 수 있을 것으로 예측할 수 있었다. 반면에, 냉각장치를 이용한 시험에서는 결함을 부분적으로 검출할 수 있었고, 정상운전 중인 원전에 적용하기 위해서는 냉각장치를 개선 보완하는 것이 필요하다고 판단되었다.

본 연구의 결과를 통하여 적외선열화상기술을 이용한 신뢰성 있는 결함 검사 기술을 개발함으로써 2차계통 배관 설비에 대한 유지보수를 용이하게 할 수 있도록 하여 감육결함 검사 시 기초자료로 사용할 수 있도록 할 것이다. 또한, 원전 설비의 가동 효율과 가동 중단으로 인한 에너지 및 경제적 손실을 최소화할 수 있을 것으로 기대된다.

Ⅰ. Introduction

The number of aging nuclear power plants after long-term operation has increased recently. Accordingly, the number of operational interruptions has increased due to malfunctions of the NPPs secondary systems. These cases occur in the secondary systems of NPPs with a range of structures due to fatigue, wall-thinning, corrosions etc.. Of these problems, wall-thinned defects occur in the pipes by the diffusion of the corrosion with the flow of the fluids, and the defects frequently take place in the carbon steel pipes with lower *Cr* contents. Such wall-thinned defects can lead to damage without warning signs while they can be found frequently in the base material part. Therefore, they are known to be one of the major factors that degrade the integrity of a pipe [1]-[2].

Periodic inspections are required for systematic management of the wall-thinned defects. In particular, they are also needed during the normal operations of the NPPs. Most of the NPP's secondary systems are not related directly to the safety of the NPPs. However, if a failure occurs in some of the secondary system, it may cause the power ramping or reactor shutdown what results in economic loss. In particular, systematic management requires a close inspection even when the NPPs is in operation. The secondary system of the NPPs is the place to which the operator or workers gain access for their work frequently. Unexpected damage to a pipe can have social impacts that cannot be compared with the loss of or damage to people, which highlights the importance of systematic management of wall-thinned defects. Consequently, considerable attention has been paid to non-destructive inspections (NDI) to examine the integrity of major facilities. In addition, there is increasing demand for the NDI that are relatively safe and enable measurements in a quick and easy manner [3].

Currently, a range of NDI are conducted such as ultrasonic testing (UT), eddy current testing (ECT) and magnetic particle testing (MT) [4]-[5]. Such NDI

involve infrared (IR) thermography. IR thermography is expected to help resolve the issues related to the limitations on the existing NDI because it is used to examine defects based on measurements of the temperature difference between defect part and non-defect parts. IR thermography is also expected to be useful on a NPP site [6].

IR thermography is a reliable technique for detecting wall-thinned defects in the inner pipes of NPPs that are in normal operation or the overhaul period, and is expected to facilitate the maintenance of plumbing fixtures of NPP's secondary system. The results of this study will be used as the basic material for the inspections of wall-thinned defects.

Ⅱ. Theoretical Background

A. IR Thermography

When an object is heated or cooled from an outside, thermal diffusion is disturbed on the surface of the target depending on the existence of the defects inside the target. In this case, the insulation effect by defects inside the target causes temperature difference on the target surface. IR thermography is used to measure the temperature on the surface of the target and convert the measurement results to an image in real-time. Based on a real-time image obtained using an infrared (IR) camera, it is possible to measure the shape and location of the defects inside the target.

IR thermography has the following features [7]:

- Non-contact technique
- Full field image of stress
- Energy measurement technique
- Easy interpretation of the results by visual effects

Currently, IR thermography is applied to the military field, stress analysis, welding monitoring, evaluation of the heat transfer characteristics, deterioration diagnosis of power facilities, defect inspection in composites, and medical diagnosis [8]. Fig. 1 shows the principle of IR thermography.

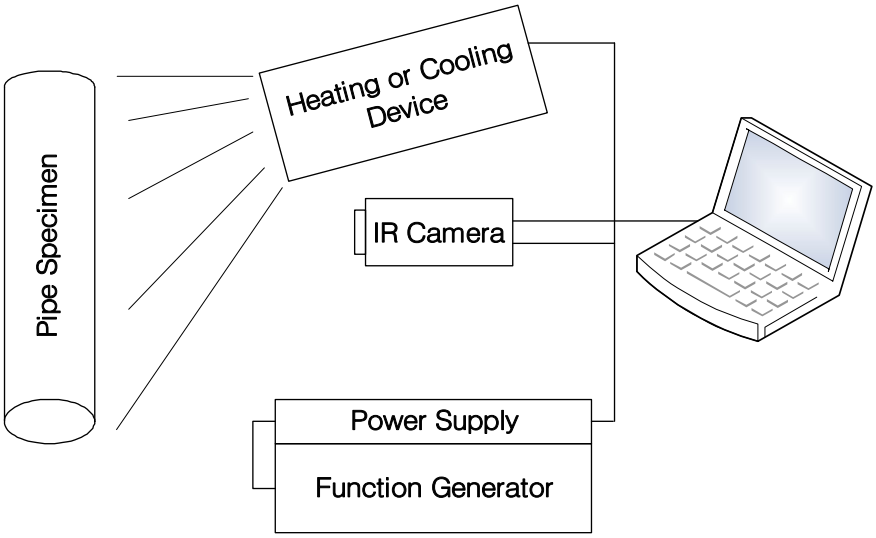

Fig. 1. Diagram of IR thermography

B. Theory

All the objects have a temperature that is above absolute zero degree and they emit radiant energy that corresponds to their temperature [9].

$$\frac{dR(\lambda, T)}{d\lambda} = \frac{2\pi hc^2\lambda^{-5}}{e^{hc/\lambda kT} - 1} \tag{1}$$

Plank's constant $h = 6.626 \times 10^{-34} J \cdot s$

Boltzmann's constant $k = 1.380546 \times 10^{-23}$

Speed of light $c = 2.998 \times 10^{8} ms^{-1}$

Eq. (1) describes the Plank's theory of black body radiation. According to the theory, there is a simple relationship between characteristics of black body radiation (energy intensity and wavelength) and its temperature. Moreover, the amount of radiation emitted from a black body radiator per unit time is determined only by

temperature, which is the characteristic of black body radiation. The characteristics can be used to calculate the temperature of black body. IR thermography enables measuring amount of emitted energy to provide a temperature image based on the correlation between amount of the detected energy and temperature [9].

$$\int_0^{\lambda} \frac{dR(\lambda, T)}{d\lambda} \qquad R_t = \sigma T^4 \tag{2}$$

Stefan-Boltzmann's constant $\sigma = 5.67 \times 10^{-8} W/(m^2 \cdot K^2)$

Eq. (2) describes the Stefan-Boltzmann's law. This theory states that the total energy radiated per unit surface area of a black body and per unit time is directly proportional to the fourth power of the absolute temperature, T. In this case, T represents the absolute temperature in Kelvin of an object and R_t is the reflection intensity of a blackbody. Based on the Eqs. (1) and (2) mentioned above, IR camera is used to measure the temperature.

An ideal black body emitter does not exist in reality. If the energy emitted from a real object is R_a and the energy emitted from a blackbody is R_b, the emissivity of an object to black body surface at the same temperature can be expressed by Eq. (3) [9].

$$\epsilon = \frac{R_a}{R_b} : \text{ Emissivity} \tag{3}$$

In this case, if ϵ=1, the object is called a black body. Therefore, for metal with low emissivity, the emissivity can be kept at 0.95 if a matte color spray, which is close to a black body, is applied.

Ⅲ. Optimal Heating/Cooling Methods

A. Heating Methods

During the shutdown of an NPP such as overhaul period, the pipe of the NPP's secondary system shows the distribution of the temperature that is almost similar to that of the room temperature. In addition, when a pipe in the room temperature is heated up rapidly, the thermal diffusion is interrupted depending on the existence of the defects inside the pipe. The insulation effect due to such defects causes difference in the temperature change that appears locally in the pipe. A proper heating device to cause such temperature difference is a very important factor to use the IR thermography. This paper examined the various heating methods for the optimal heating device and investigated the applicability of the methods.

1. Halogen Lamp

As a kind of incandescent lamp, a halogen lamp is based on the chemical reaction of the halogen material with inert gas including halogen material in tiny quantity filled in the lamp. The halogen lamp shows linear changes in spectral energy distribution when a light source is visible ray (380-760nm). Therefore, the lamp is highly stable for light source and shows high radiant energy in infrared light (higher than 760nm) region. Consequently, the halogen lamp can be used as heat source. Moreover, the lifespan of the lamp is greatly influenced by high voltage while rated voltage is an important factor to performance of the lamp. The halogen lamp shows a small decrease in luminous flux at the moment of lighting compared to other common lamps and a small change in distribution temperature (color temperature) during the period of the lifespan.

2. Infrared Lamp

As a kind of incandescent lamp, the infrared lamp reinforces characteristic of the infrared radiation. The infrared lamp emits visible ray less than incandescent lamp. Instead, the lamp emits most of input energy in the form of the infrared energy that has thermal effect. The most significant characteristic of the infrared lamp is high efficiency of the heat transfer because the surface of object is directly heated up due to radiation. However, the lamp has the weak point that it has the shorter lifespan than the halogen lamp.

3. Ultraviolet Lamp

The ultraviolet ray has the wavelength of 100-400nm as a short-wavelength ray that has the highest energy among various rays that reach the earth from the sun. A common ultraviolet lamp emits 70-80% of the input energy while in operation. Due to a conduction, a radiation and a convection, such the high temperature increases the temperatures of a glass tube, a reflector and hardening materials that enclose the lamp. The most significant characteristic of the ultraviolet lamp is that multi-purpose lamp can be produced depending on usage of the lamp.

4. Xenon Lamp

A xenon lamp emits ray due to electric arc discharge that happens inside tube of the quartz crystal charged with high-pressure xenon gas. A spectral distribution of the xenon lamp consists of a continuous spectrum that is uniform from the ultraviolent region to visible region and a strong line spectrum in the part of near-infrared ray. In regard to natural lighting and performance, the color temperature is almost constant while the brightness is very high. Moreover, optical power becomes stable immediately at the moment of the lighting. Instant start is

also possible after lights go out.

5. Induction Heating Device

The induction heating device heats up object by converting electric energy to thermal energy in the electromagnetic induction. The induction heating device enables intensive heating in a short period of the time. Furthermore, the device can be used semi-permanently without the maintenance, which provides the economical strong points. However, the device has the weak points that it can be used only for metal and requires the high initial cost of the production.

6. Air Heater

An air heater generates hot air in the high temperature and has Ni-Cr hot wire that is coiled in the center of the ceramic inside quartz tube and the stainless pipe. The air heater absorbs ambient air and at the same time, sends heat in hot wire to nozzle, which heats up surface of the object. The air heater can be manufactured in a small size while it can generate high temperature. In addition, the heating rate is high with use of the diverse nozzles. Therefore, it is possible to heat up a specific part of the object intensively. However, the air heater has the weak points that it causes high noise and also heats up ambient air together.

7. Selection of a Heating Method

This paper intended to derive the optimal heating method in order to obtain the thermal image of the geometric shape of the defects such as a size of the defects and a depth from the surface in an easier and quicker way. The heating methods examined to be applied to this study included the method to heat up pipe using the lamps such as a halogen lamp, an infrared lamp and a xenon lamp and the method

to heat up pipe using an induction heating device and an air heater. Among the aforementioned heating methods, we examined the characteristics of various heating methods to investigate applicability of such methods to this study. Table 1 shows the examination results of applicability.

As shown in Table 1, a halogen lamp was evaluated to be the most excellent among the heating methods to use the IR thermography and detect the defects in the pipe of the NPPs. In addition, the halogen lamp is currently used by universities and research institutes as a heating device to investigate the defects using the IR thermography. Therefore, performance of the halogen lamp has been proved in many studies. In this paper, the IR thermography was used as a heating device with the halogen lamp to detect the wall-thinned defects inside the pipe.

TABLE 1. Applicability of the heating methods

Heating method	Applicability
Halogen lamp	A halogen lamp can be manufactured in a small size and light weight. The lamp itself generates heat a lot and is relatively strong against thermal shock compared to other lamps. In addition, the brightness and temperature are constant until the end of lifespan while lifespan of the lamp is long thanks to halogen regenerative cycle.
Infrared lamp	A heat is not absorbed by air while it goes straight through space for heating. As surface of the object is heated up directly, the thermal efficiency is high. On the other hand, the emission of the infrared ray decreases performance of an IR camera because the emission interferes with acquisition of the thermal image by an IR camera.
Xenon lamp	The xenon lamp has excellent productivity of the light and shows the long distance and large area of the light emission. In addition, the lamp can be used without stabilizer and manufactured in light weight. On the other hand, the lamp has the large area of the light emission so that it may heat

	up air in the surroundings. The lamp is expensive compared to other lamps.
Ultraviolet lamp	The UV lamp can be produced in diverse kinds according to usage. The lamp can be used for thick material because it has the high penetrating power. On the other hand, high-temperature heat in lamp itself has an adverse effect on quality of the lamp.
Induction heating device	The induction heating device enables rapid heating and local heating. It can be used semi-permanently without maintenance. Moreover, the device can be controlled as it has diverse outputs and enables selecting frequencies in wide range. On the other hand, it is required to design coil in the pipe. The device is large in volume so that it is not easy to move the device.
Air heater	An air heater is small in size with high heating rate. The nozzle can be manufactured in various forms so that it is possible to provide heat to the straight pipe and bend pipe properly. On the other hand, the heater heats up not only object but also ambient air. Therefore, it is difficult to obtain the thermal image with use of an IR camera.

B. Cooling Methods

In an NPP that is in normal operation, the pipes are covered with insulators and are at high temperature, transferring heat up to the surface of the insulators. When a cooling device is used to cool the pipes at high temperatures, thermal diffusion is disturbed depending on the existence of defects inside the pipes. The insulation effects by defects cause local differences in temperature on the surface of the pipes. When an IR camera is used to obtain a thermal image of the pipes, where such a temperature difference occurrs, defects in the pipes are shown in the image depending on the existence of defects. Therefore, after examining various cooling methods and investigating applicability of such methods, we found out on an optimal cooling method to detect defects in the NPP's pipes using the IR thermography.

1. Tube Air Cooler

A tube air cooler is a cooling device where pathway of air current is narrowed to increase fluid velocity as compressed air rotates in high speed, which aims at separating hot air current from cool air current. The tube air cooler uses compressed air in a general compressor to cool air readily. In addition, the cooler is fundamentally safe because refrigerant, electricity or any chemicals are not used for the cooler. The cooler is effective specially for local cooling even though it has low capacity. However, the cooler has some drawbacks because it requires an additional equipment to use compressed air and needs to be installed with equipment that produces compressed air in order to be used portably.

2. Water-cooled Air cooler and Air-cooled Air Cooler

A cooler is a device that converts high-temperature high-pressure gaseous

refrigerant to low-temperature liquid refrigerant. Gaseous refrigerant containing heat that is taken away from evaporator gets cooled as it passes through condenser. Therefore, heat is released to the outside as the gaseous refrigerant is turned to the liquid refrigerant. Cooler can be classified to water-cooled air cooler and air-cooled air cooler. The air-cooled air cooler has the excellent cooling capability as it prevents degradation of cooling function that is attributable to increase in room temperature. Moreover, the air-cooled air cooler enables keeping temperature constant precisely and can be adjusted in the wide range of use. The water-cooled air cooler uses water from a cooling tower to work in the condensation cooling method. It minimizes indoor noise and shows the higher cooling efficiency than the air-cooled air cooler.

3. Heat Pipe-Type Cooler

A heat pipe-type cooler is a cooling device that transfers heat in large quantity to condenser prior to using the pin installed in the condenser for cooling through natural convection or forced convection. The heat pipe-type cooler uses working fluid of FC-27 in the maximum thermal load of 1.5kW. In addition, it has the operating temperature of -30～120℃ with the high cooling efficiency. Since water quantity in heat pipe can be adjusted, the heat pipe-type cooler can be manufactured in various forms. However, the heat pipe-type cooler has drawbacks that it takes longer time for cooling than other coolers and requires the installation of additional fan to increase cooling efficiency.

4. Fan

A fan is a device that stirs up the wind as wings installed on the axis of electric motor rotate. The fan can be classified to desk fan, ventilating fan and stand fan depending on shape and purpose of use. Major parts of the fan include

stand, pillar, motor, and wing. It can be adjusted quite freely according to angle and direction of movement (up and down or right and left). The pillar of the fan also can be adjusted upwardly or downwardly. The fan has the front-side control panel that enables an easy control as all of the devices are installed on the front side of stand. The fan can be also classified to turbo fan, limit fan and sirocco fan depending on shape of wing. The turbo fan has the wing that its tip is bent to the backward of rotation direction, which includes the one with curved wing and the one with straight wing. The turbo fan shows the high efficiency and can be operated relatively quietly even at a high speed. The limit fan is an upgraded version of the turbo fan and the sirocco fan. It has the streamlined wing that is manufactured by folding a thin plate. Therefore, the limit fan can be rotated in a high speed with low noise. The sirocco fan has a bent shape as the tip of wing is bent toward the rotation direction. Compared to other types of fans in the same capacity, the sirocco fan features the significantly low number of rotation.

5. Selection of a Cooling Method

In this study, an optimal cooling method was selected to obtain the IR image of defects in a geometric shape in an easier and quicker way with a view to examine the defect size and depth from the surface. Previous cooling methods include a method for cooling a pipe using a water-cooled air cooler or an air-cooled air cooler, a tube air cooler, a heat pipe-type cooler, and a fan. Table 2 lists the characteristics of their respective cooling methods.

As shown in Table 2, the cooling method using a fan was evaluated to be the best among the various cooling methods. The fan cooling method can be combined with other cooling methods or can be used independently. Therefore, the fan cooling method was used in this study to detect wall-thinned defects inside the pipe based on IR thermography.

TABLE 2. Applicability of the cooling methods

Cooling method	Applicability
Tube air cooler	As compressed air is used for cooling, the cooler is cheap and portable. The cooler has low capacity, which is effective for cooling locally. On the other hand, it requires additional equipment to use compressed air. Some limitations are expected when a cooler is used on the site of the NPPs.
Air-cooled air cooler and Water-cooled air cooler	The coolers enable the maintenance of a constant temperature and can be adjusted over a wide range of use. They show excellent cooling capability with high efficiency. On the other hand, the initial cost of manufacturing is high. They are heavy and unsuitable for portable use.
Heat pipe-type cooler	The cooler has high cooling efficiency while the water quantity in a heat pipe can be adjusted, which enables manufacture in a range of forms. In addition, the interval of the heat pipe itself can be adjusted. On the other hand, the cooler shows high cooling efficiency when it is installed directly on the target. A fan also needs to be installed.
Fan cooler	A fan is readily available, and its wing can be manufactured in a variety of forms. The angle of the cooler can be adjusted while the rotation speed of the fan can be adjusted continuously and freely. In addition, the cooler can be manufactured to be light weight. Therefore, it is believed that the cooler will be easy to use and portable.

Ⅳ. Simulation and Experiment

In this study, the halogen lamp heating device and the fan-type cooling device were selected as the equipment for heating and cooling the pipe specimen. Before the experiments, finite element analysis (FEA) simulation was conducted to examine the heating and cooling effect of the selected heating and cooling device as well as the optimal experiment conditions. FEA simulation was performed using ANSYS FLUENT 13.0, and the GAMBIT program was used to generate the meshes that were modeled to conduct FEA simulation [10]-[11]. In addition, based on the simulation results, the heating and cooling experiments were performed to detect defects inside the pipe specimen.

A. Specimen and Equipment

1. Specimen

The pipe specimen used in this study has defects inside for the heating and cooling experiments. For the experiments, the pipe specimen, 4 inches in diameter, was manufactured with the material of Shc.80 ASTM A106 Gr.B, which is similar to the actual pipe used in the NPPs. As shown in Fig. 2, the pipe specimen has a total length of 500mm, thickness of 7.5mm, and external diameter of 113mm. On the inner surface, four defects were created in a constant length. The four defects had a depth of 50% and 75%, respectively, of the thickness of the pipe specimen. Table 3 shows the dimensions of the created defects in the pipe specimen. A matte color spray was also applied to the surface of the pipe specimen to maintain a surface emissivity of 0.95 and minimize the reflection of light. Fig. 3 shows the pipe specimen that was manufactured in this study.

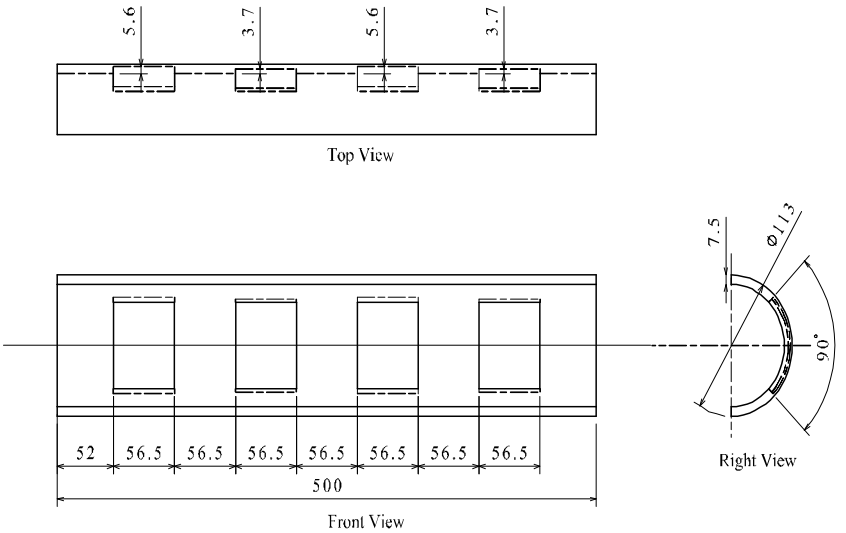

Fig. 2. Design of a pipe specimen

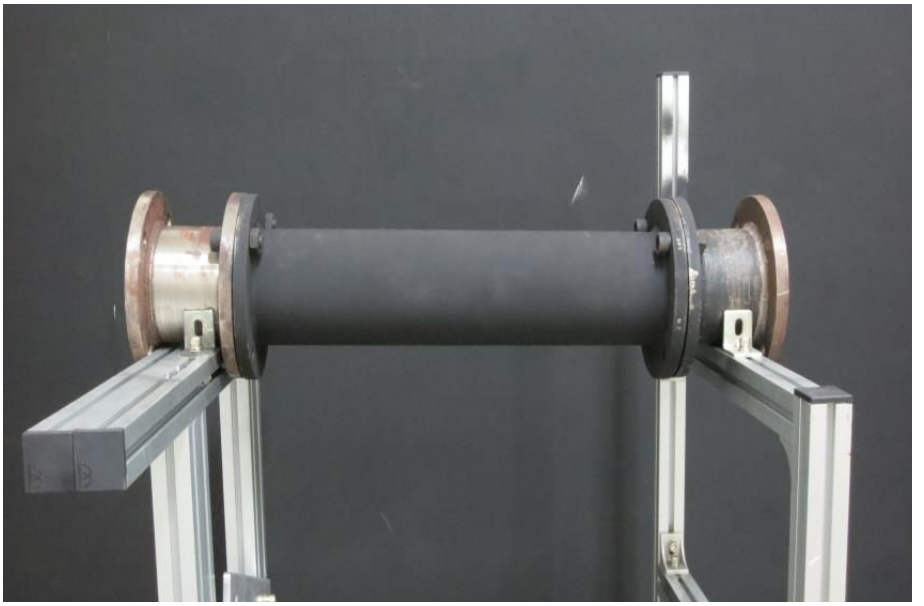

Fig. 3. Pipe specimen

TABLE 3. Dimensions of the defects in the pipe specimen

	Size
Circ. Angle, Θ/π	0.25
Depth, d/t	0.5, 0.75
length, L/D0	0.5

2. Heating and Cooling Devices

In this study, we investigated and examined the devices that could be used to heat up and cool off pipe specimen before selecting each device. As for heating device, two 1kW halogen lamps were used along with power supply to adjust the power. The 1kW halogen lamp was PAR64 CP61 EXD NSP of Philips, which features 20cm of the diameter, 3,200K of the color temperature and 300 hours of the average lifespan.

A blower fan was used as a cooling device to cool the pipe specimen. The blower fan had 6 wings with a maximum wind speed of 16.5m/s. The size of its wing was 27cm. The blower fan allows uniform cooling of the pipe specimen.

(a) heating device

(b) cooling device

Fig. 4. Heating and cooling devices

B. Simulation Method

In regard to experiments for wall-thinned defects inside the pipe, thermal analysis can be determined based on the FEA simulation that uses the numerical technique prior to experiment. The FEA simulation provides the data to predict problems in the thermal distribution of the pipe specimen based on an analysis of the simulation results, to configure the heating and cooling device that can be applied to an actual environment, and investigate the optimal experiment conditions.

1. Pipe Specimen Modeling and Boundary Condition

In this study, the pipe specimen used for the experiment was ASTM A106 Gr.B, which is frequently used for an actual pipe of the NPP's secondary system that was manufactured from carbon steel. Therefore, pipe specimen modeling for FEA simulation was performed under the same conditions as those for the pipe specimen that was used for experiment on the heating and cooling devices.

The basic boundary conditions for the FEA simulation were established as follows. To simplify the analysis, symmetric conditions were set to consider half of the pipe specimen model. In addition, the temperature (25℃) for the entire space were kept constant, excluding those for the pipe specimen model and heating and cooling device model.

2. Heating Method

In this study, a halogen lamp was used as the heating device. The characteristics of the halogen lamp were used to make a FEA simulation to examine the heating effects of the heating device and the optimal experiment conditions. ANSYS FLUENT was used to perform the experiment according to distance between the 1kW halogen lamp model and the pipe specimen model and with power of the

halogen lamp adjusted [10]-[11]. As for the simulation conditions, the distance between the pipe specimen model and halogen lamp model was adjusted to 1m, 2m and 3m, whereas power of the halogen lamp model was set to 50%, 60% and 80% accordingly. In addition, a surface temperature, a surface emissivity, a shape, and a surface area of the halogen lamp model were taken into consideration. The pipe specimen model and the halogen lamp model in rectangular coordinate were set as the basic modeling to make a FEA simulation for the heating device. Fig. 5 (a) shows diagram of pipe specimen model and halogen lamp model while Fig. 5 (b) shows that mesh was created to improve precision of a FEA simulation.

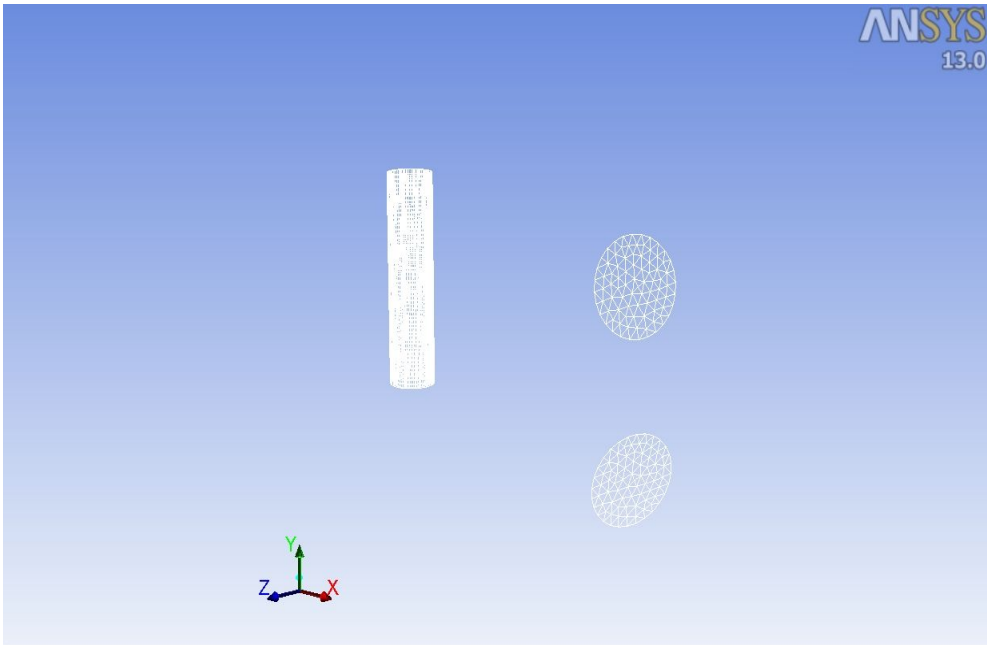

(a) diagram of the pipe specimen model and halogen lamp model

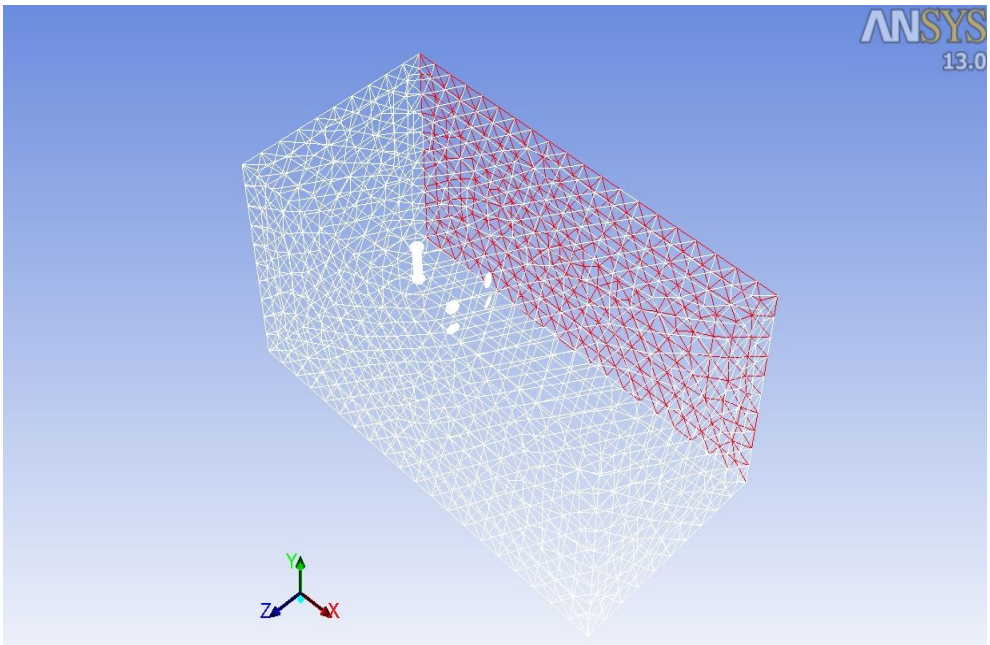

(b) creation of meshes

Fig. 5. Configuration of modelled halogen lamp and pipe specimen model

3. Cooling Method

This study used the cooling device was based on the principles of the fan. Therefore, to conduct FEA simulation of the cooling device, the principles of a fan were applied to cool the pipe specimen model through forced convection caused by the pressure difference between surfaces of the fan model and the pipe specimen model. In addition, water was designed to flow inside the pipe model to describe a hot pipe in the NPPs in normal operation. The mass flow rate of water was set to 1kg/sec. Fig. 6 (a) shows diagrams of the pipe specimen model and fan model. Fig. 6 (b) shows the meshes that were created to improve the analysis accuracy. ANSYS FLUENT was used to perform a simulation of the FEA simulation for a cooling device [10]-[11]. The distance between the fan model and pipe specimen model and the pressure difference in the fan model were adjusted. For simulation conditions, the distance between the pipe specimen model and the fan model was adjusted to 1m, 2m and 3m, whereas the pressure difference in the fan model was set to 100Pa and 150Pa. The temperature of water flowing inside the pipe specimen model was adjusted to 100℃ and 200℃. Here, the pressure difference of 100Pa can be represented by 12.4m/s and the pressure difference of 150Pa can be represented by 15.2m/s.

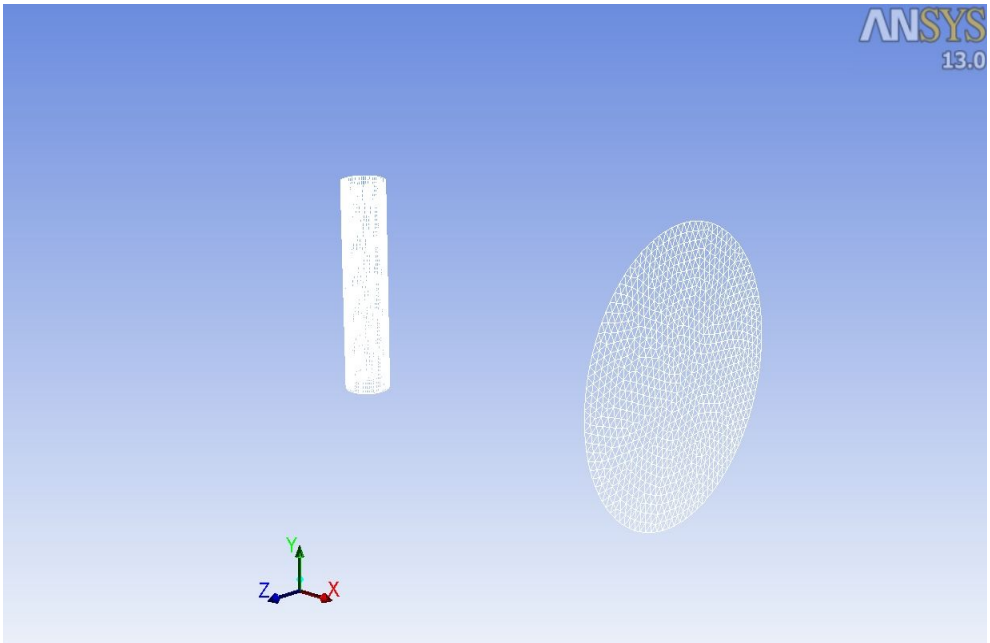

(a) diagram of the pipe specimen model and fan model

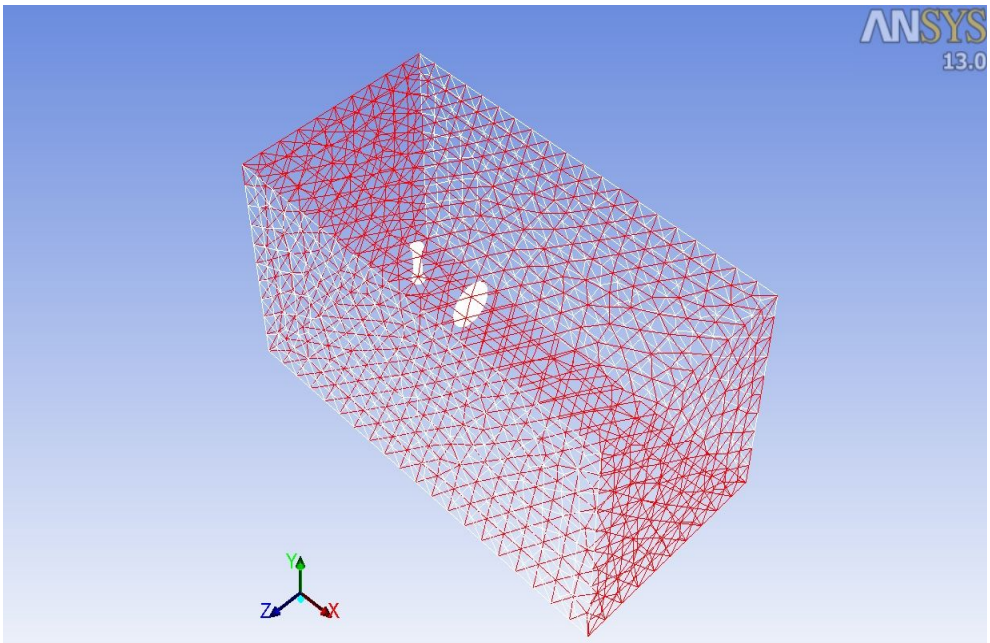

(b) creation of meshes

Fig. 6. Configuration of modelled fan and pipe specimen model

C. Simulation Results

1. Heating Simulation Results

A FEA simulation for the heating device was conducted as modeling of two 1kW halogen lamps with optical power was performed with power and distance adjusted. Table 4 shows the conditions of the FEA simulation. Fig. 7 shows the simulation results for 60 seconds respectively as power of halogen lamp model was kept at 50% and distance between the pipe specimen model and halogen lamp model was adjusted to 1m, 2m and 3m. Regardless of the distance between the pipe specimen model and halogen lamp model, the temperature difference in defect site was observed with the naked eye under all of the experiment conditions. However, the sharpness of the temperature variation in defect site was lower when depth of the defects was 50% of the pipe specimen model thickness than when depth was 75%. Moreover, sharpness was the highest when the distance was 1m. It was confirmed that shape of the defects looked broken when the distance was 3m.

Fig. 8 shows the simulation results that was performed for 60 seconds respectively as power of the halogen lamp model was kept at 60% and distance between the pipe specimen model and the halogen lamp model was adjusted to 1m, 2m and 3m. Regardless of distance between the pipe specimen model and the halogen lamp model, the temperature difference in defect site was observed to be conspicuous under all of the experiment conditions while a shape of the defects was more distinct than the case where power of the halogen lamp model was 50%. However, a sharpness of the defects was lower when a depth of the defects was 50% of the pipe specimen model thickness than when depth was 75%, which was the same as the case where power of the halogen lamp model was 50%. In addition, when the distance between the pipe specimen model and the halogen lamp model was 1m, the defects were clear while a shape of the defects was the most similar to actual shape of the defects.

Fig. 9 shows the simulation results that was performed as power of the halogen lamp model was kept at 80% and distance between the pipe specimen model and the halogen lamp model was adjusted to 1m, 2m and 3m. A shape of the defects was similar to the actual shape of the defects.

According to the FEA simulation results, the temperature on surface of the pipe specimen model was the highest when power of the halogen lamp model was 80% and distance between the pipe specimen model and the halogen lamp model was 1m. Moreover, the defects were clear while shape of the defects was the most similar to actual shape of the defects. However, a sharpness of the defects varied according to depth of the defects. As distance between the pipe specimen model and the halogen lamp model increased, heat transfer to surface of the pipe specimen model was decreased dramatically. Therefore, the FEA simulation results confirmed the heating effects of the heating device that used halogen lamp. Consequently, it could be predicted that defects could be well detected under the optimal experiment conditions that power of the halogen lamp was 80% and distance between the pipe specimen and the halogen lamp was 2m or less.

TABLE 4. Conditions of the heating simulation

Heating source	Power of halogen lamp model	Heating time	Distance between pipe specimen and halogen lamp model
1kW halogen lamp	50%	60sec	1m, 2m, and 3m respectively
	60%		1m, 2m, and 3m respectively
	80%		1m, 2m, and 3m respectively

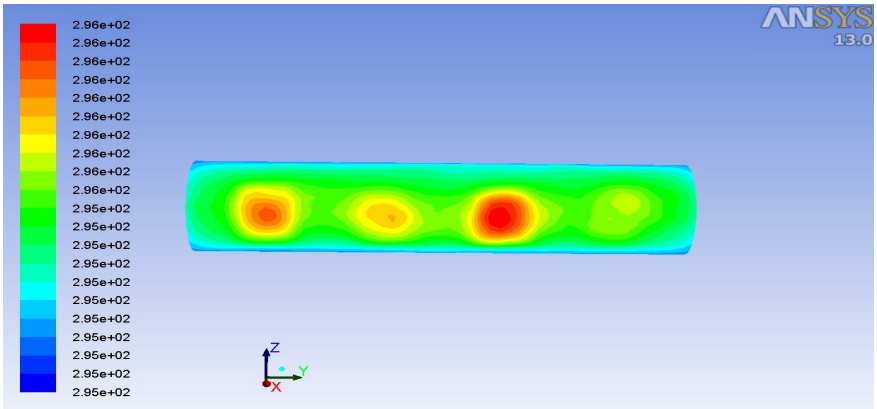

(a) distance of the halogen lamp model from pipe specimen model-1m

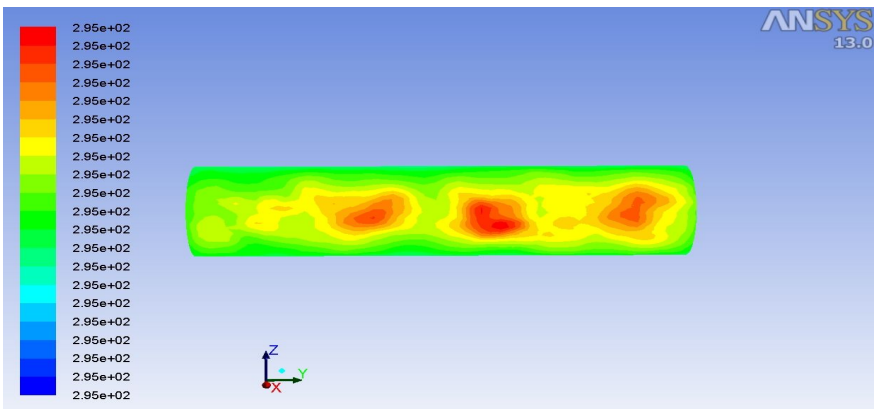

(b) distance of the halogen lamp model from pipe specimen model-2m

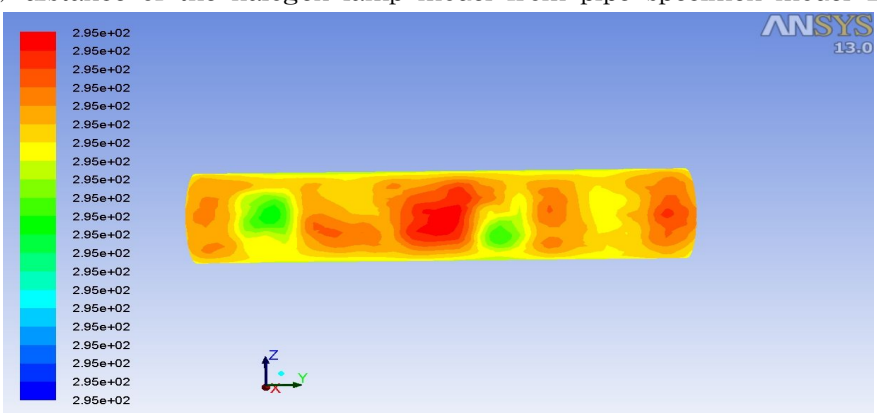

(c) distance of the halogen lamp model from pipe specimen model-3m

Fig. 7. 50% power of 1kW halogen lamp model

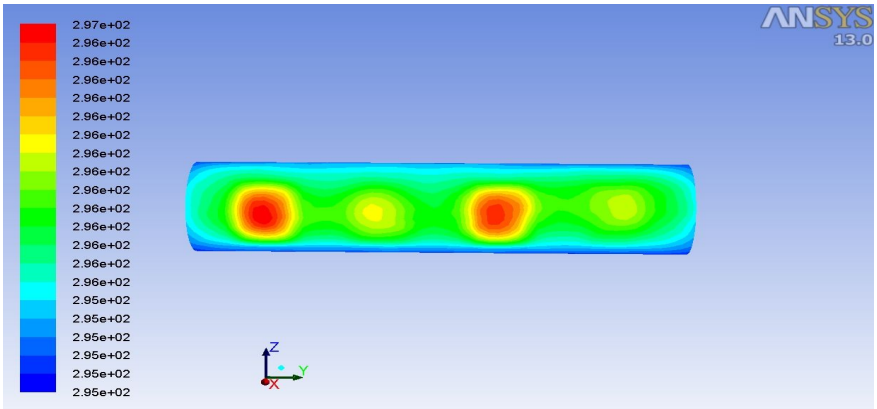

(a) distance of the halogen lamp model from pipe specimen model-1m

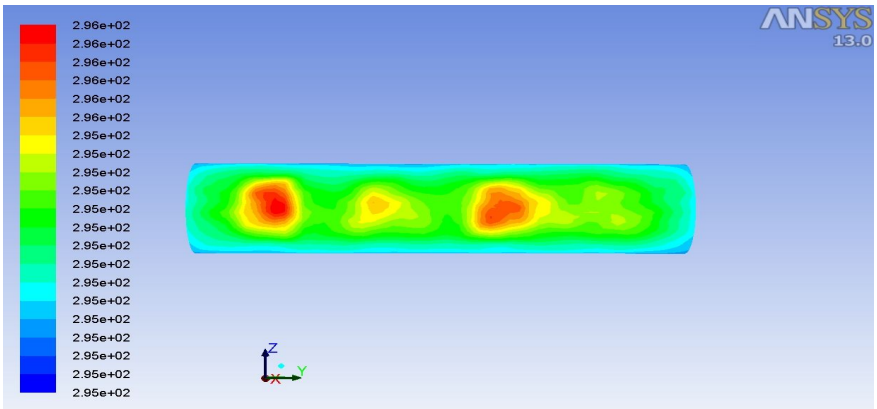

(b) distance of the halogen lamp model from pipe specimen model-2m

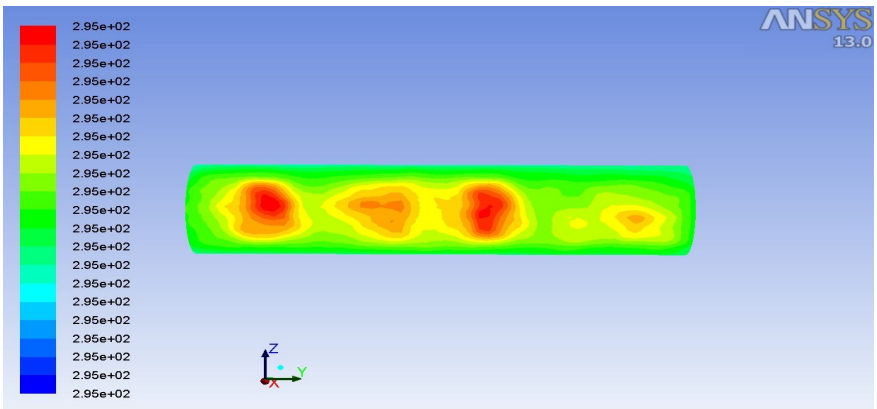

(c) distance of the halogen lamp model from pipe specimen model-3m

Fig. 8. 60% power of 1kW halogen lamp model

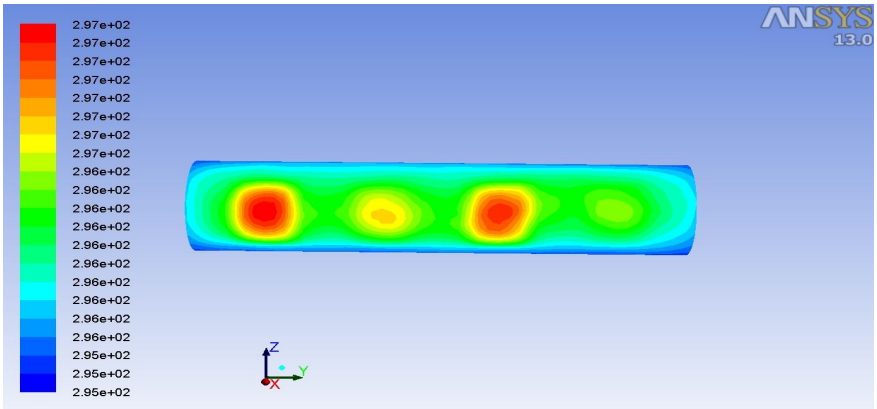

(a) distance of the halogen lamp model from pipe specimen model-1m

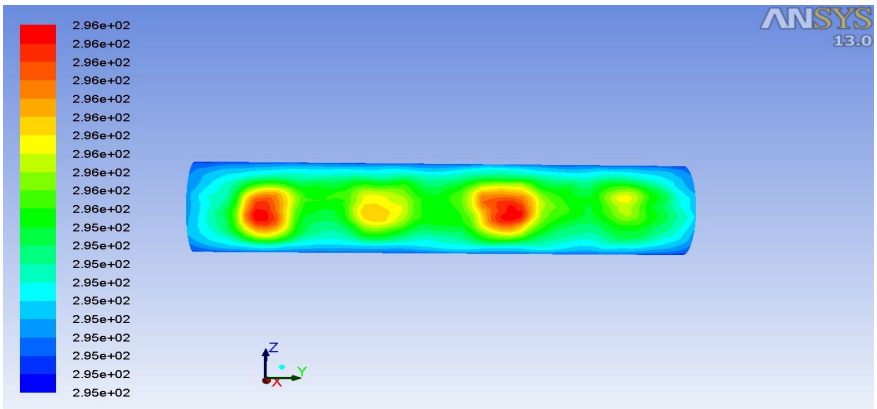

(b) distance of the halogen lamp model from pipe specimen model-2m

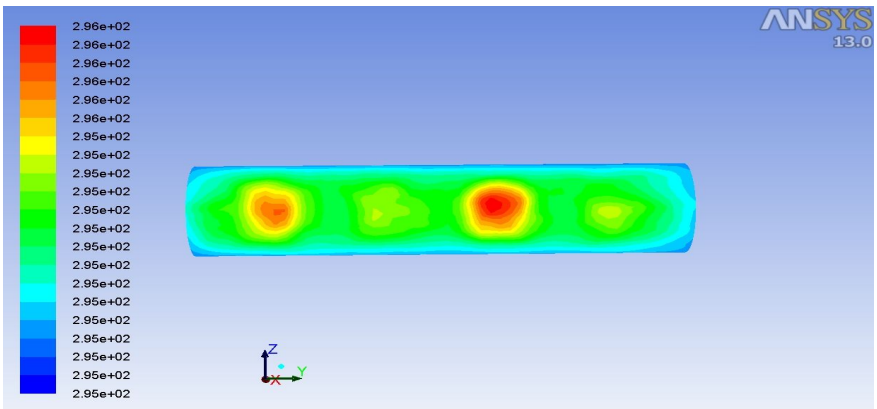

(c) distance of the halogen lamp model from pipe specimen model-3m

Fig. 9. 80% power of 1kW halogen lamp model

2. Cooling Simulation Results

A FEA simulation to confirm the cooling effects of the cooling device and investigate the optimal experiment conditions was performed as pressure difference of the fan model was adjusted to 100Pa and 150Pa and distance was adjusted to 1m, 2m and 3m accordingly. In addition, as temperature of the water that flowed inside the pipe specimen model was set at 100℃ and 200℃, an analysis was made for 60 seconds. Table 5 shows the conditions of the FEA simulation.

The simulation result were obtained based on the image at 30 seconds, which showed the defects the most clearly compared to the results of simulation that was conducted for 60 seconds. Fig. 10 shows the simulation results that were performed when the pressure difference of the fan model was 100Pa, the temperature of the pipe specimen model was 100℃ and 200℃, and the distance between the pipe specimen model and fan model was adjusted to 1m, 2m and 3m. The deviation of the temperature in the defect part was conspicuous under all simulation conditions regardless of the distance between the pipe specimen model and fan model.

In addition, Fig. 11 shows the simulation results that were performed when the pressure difference of the fan model was 150Pa, the temperature of the pipe specimen model was 100℃ and 200℃, and the distance between the pipe specimen model and fan model was adjusted to 1m, 2m and 3m. The shape of the defects was observed with the naked eye. The defects appeared clearer as the pressure difference in the fan model increased regardless of the depth of the defects. Moreover, the defects became more distinct when the distance between the pipe specimen model and fan model was shorter (1m and 2m).

Consequently, the FEA simulation could confirm the cooling effects of the fan cooling device. The optimal experiment conditions include a pressure difference of 150Pa in the fan and a close distance, such as 1m and 2m between the pipe specimen and fan cooling device.

TABLE 5. Conditions of the cooling simulation

Cooling source	Pressure difference of fan model	Temperature of pipe specimen model	Distance between pipe specimen and fan model
Fan	100Pa	100℃	1m, 2m, 3m respectively
		200℃	1m, 2m, 3m respectively
	150Pa	100℃	1m, 2m, 3m respectively
		200℃	1m, 2m, 3m respectively

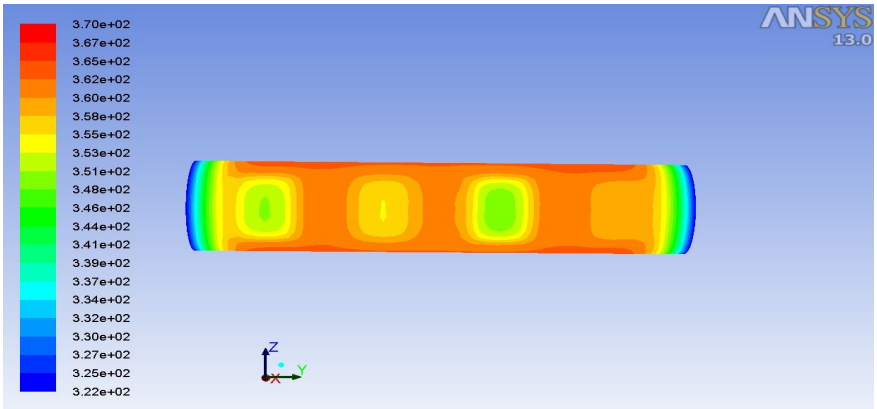

(a) distance of the fan model from pipe specimen model-1m (100℃)

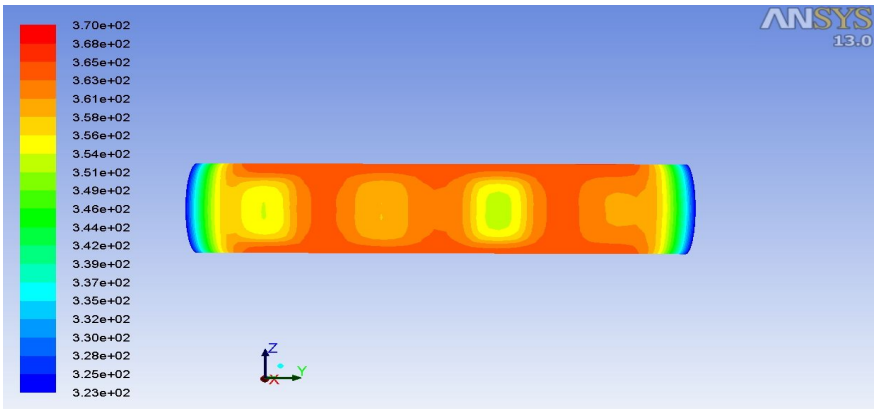

(b) distance of the fan model from pipe specimen model-2m (100℃)

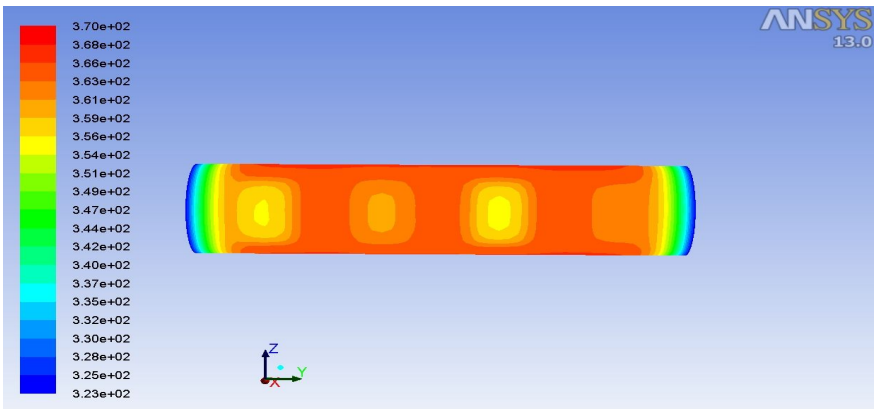

(c) distance of the fan model from pipe specimen model-3m (100℃)

Fig. 10. Differential pressure of 100Pa on fan model

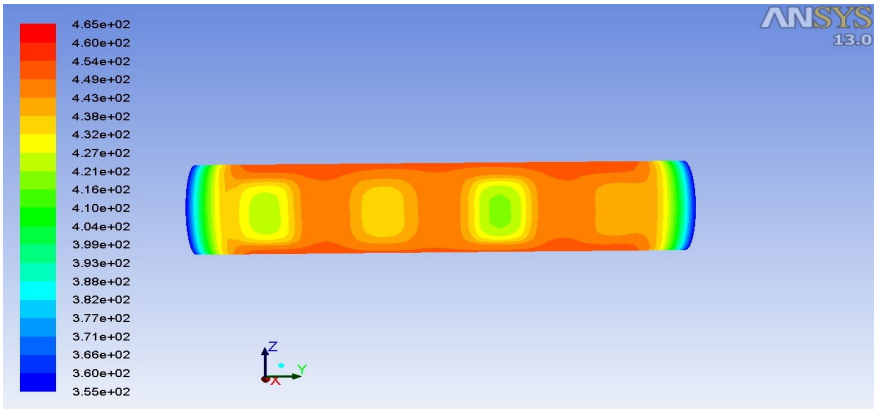

(d) distance of the fan model from pipe specimen model-1m (200℃)

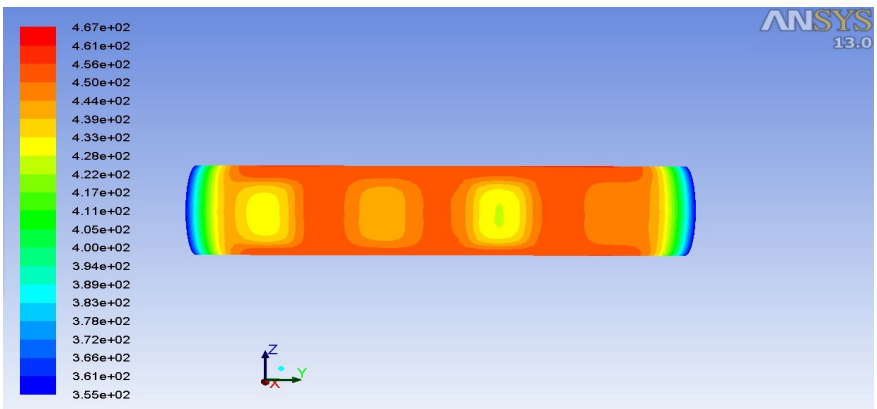

(e) distance of the fan model from pipe specimen model-2m (200℃)

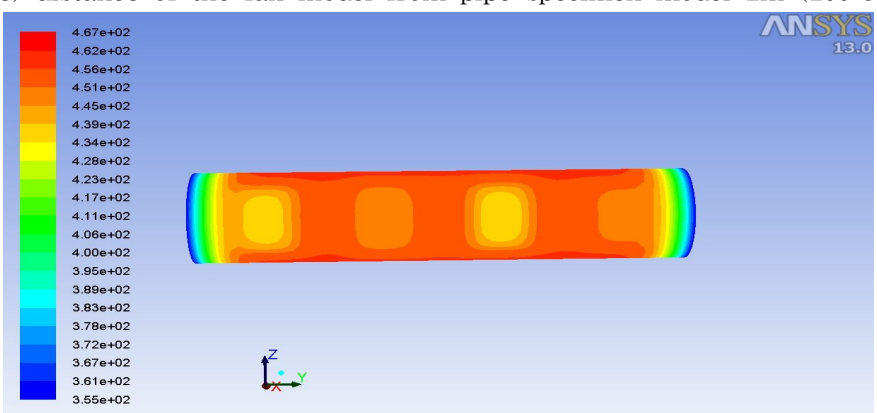

(f) distance of the fan model from pipe specimen model-3m (200℃)

Fig. 10. Differential pressure of 100Pa on fan model (continued)

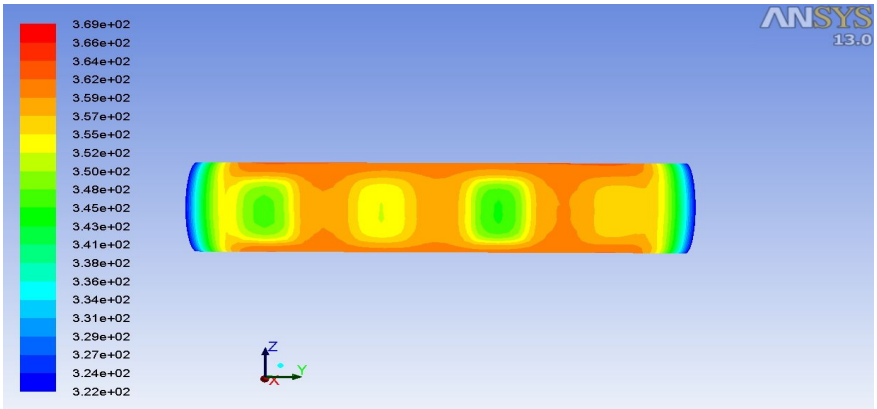

(a) distance of the fan model from pipe specimen model-1m (100℃)

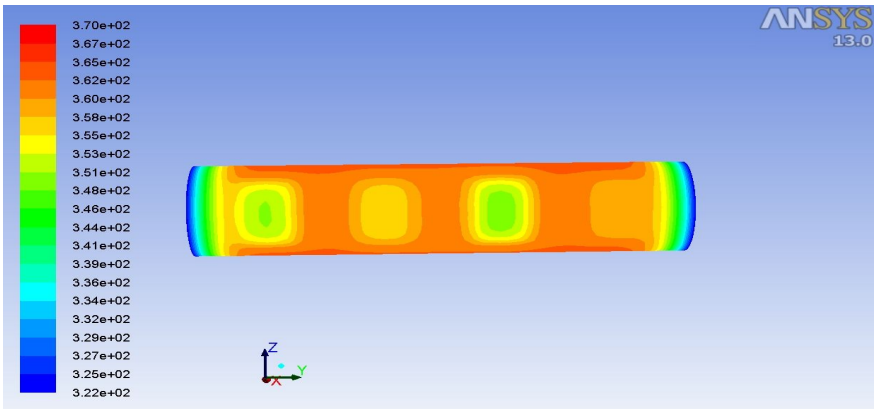

(b) distance of the fan model from pipe specimen model-2m (100℃)

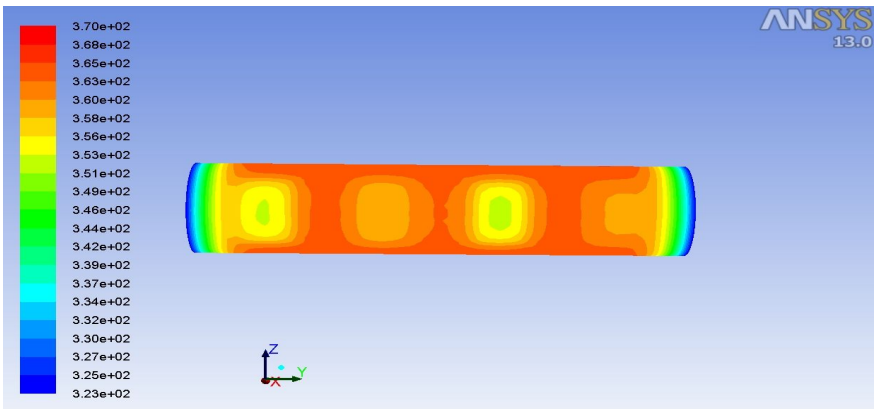

(c) distance of the fan model from pipe specimen model-3m (100℃)

Fig. 11. Differential pressure of 150Pa on fan model

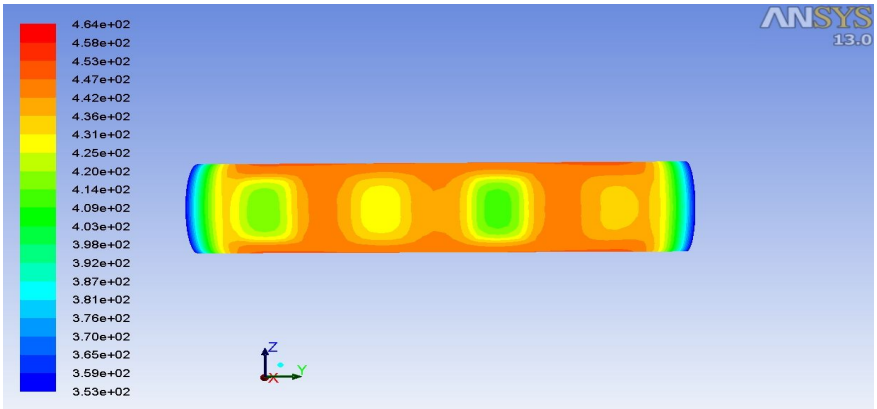

(d) distance of the fan model from pipe specimen model-1m (200℃)

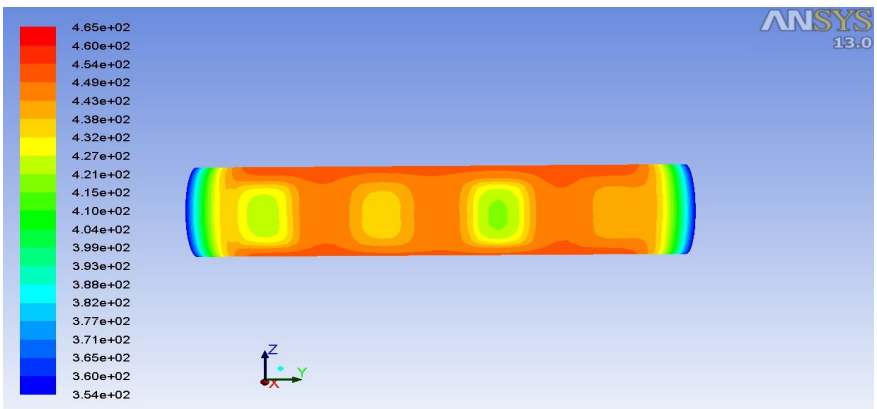

(e) distance of the fan model from pipe specimen model-2m (200℃)

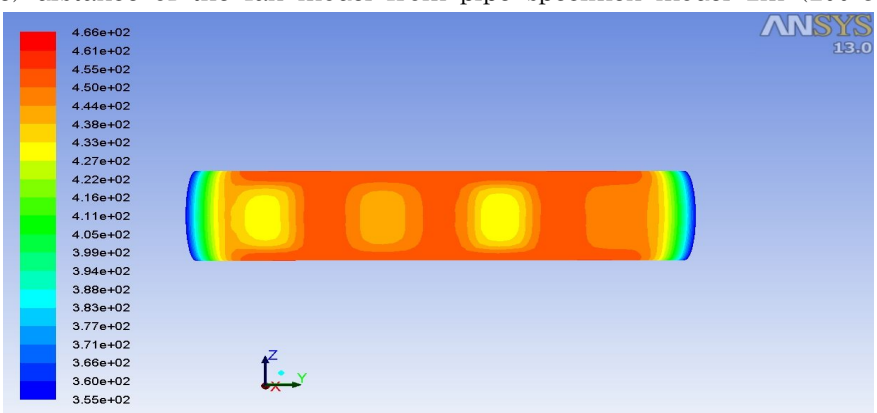

(f) distance of the fan model from pipe specimen model-3m (200℃)

Fig. 11. Differential pressure of 150Pa on the fan model (continued)

D. Experiment Method

FEA simulation that was conducted based on the numerical technique before the experiment could confirm the heating and cooling effects of the heating and cooling device. In this study, an IR camera and the heating and cooling device were configured according to the experiment conditions established based on the FEA simulation of detect wall-thinned defects inside a manufactured pipe specimen.

1. Heating Method

During the overhaul period of the NPPs, the temperature of the pipe system is kept at room temperature. Therefore, the heating device was used to conduct the experiment to detect wall-thinned defects inside the pipe after it was confirmed that temperature of the pipe specimen was room temperature. Based on the results of a FEA simulation, the experiment equipment included an IR camera, halogen lamps, a pipe specimen, a lamp power supply, and a PC. The experiment was conducted in an enclosed space. An air conditioner was used to ensure that temperature in experiment room were kept constantly at 25℃.

The experiment with use of the heating device based on simulation of the NPP's overhaul period was conducted as temperature of a pipe specimen was set at room temperature and distance between a pipe specimen and halogen lamps and the intensity of the halogen lamp were set as variables. The distance between a pipe specimen and an IR camera was set at 1m while the distance between a pipe specimen and the halogen lamp was adjusted to 1m and 2m. In addition, intensity of 1kW halogen lamp was adjusted to 60% and 80% while each experiment was conducted for 120 seconds. Fig. 12 shows the configuration of the experiment equipment to detect the wall-thinned defects.

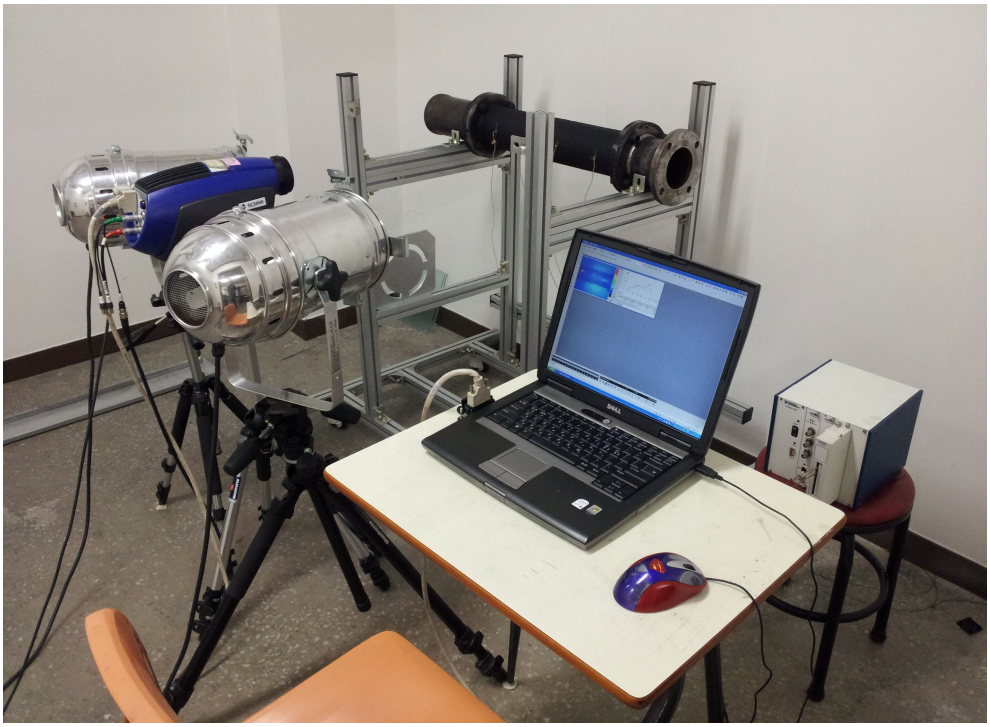

Fig. 12. Configuration of experimental equipment using heating device

2. Cooling Method

The temperature of the pipe should be kept high because it is assumed that inspections are conducted for the wall-thinned defects inside the pipes of the NPPs that is in normal operation. Therefore, the experiment for this study was conducted when the temperature of the pipe specimen was kept high. To this end, a heating device in the pipe was manufactured before it would be inserted inside the pipe specimen. The inner heating device was manufactured to ensure that the support was close to the inner wall of the pipe specimen and the support could be wrapped up with two heating tapes that could be heated up to 400℃. Fig. 13 shows the inner heating device used to implement a hot pipe.

To verify the heating performance of the inner heating device, the device was

installed inside the pipe specimen before being heated up. An IR camera was used to measure the temperature distribution. The measurement results showed that the surface temperature of the 4-inch pipe specimen was kept at 142~150.35℃ depending on the location when the temperature of the two heating tapes was set at 320℃ each. Fig. 14 shows the surface temperature of the pipe specimen that was measured using an IR camera when the maximum surface temperature of the pipe specimen was 150℃. According to the measurement results, the highest temperature was observed in the center of the pipe specimen. The temperature tended to decrease with increasing distance from the center. The low temperature of both edges was expected from the heat loss caused by the flange parts.

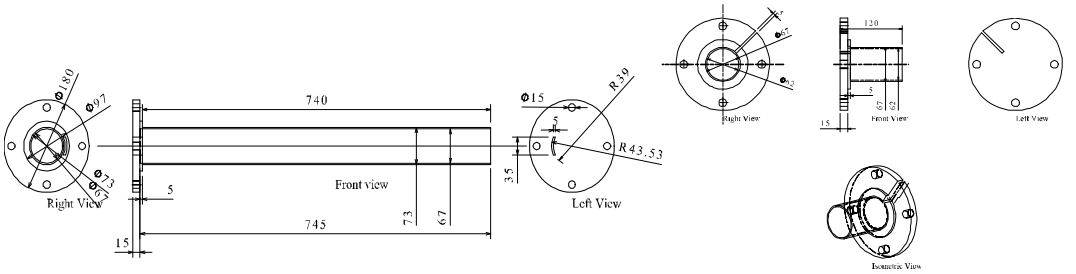

(a) design of the inner heating device

(b) inner heating device

Fig. 13. Inner heating device of pipe specimen

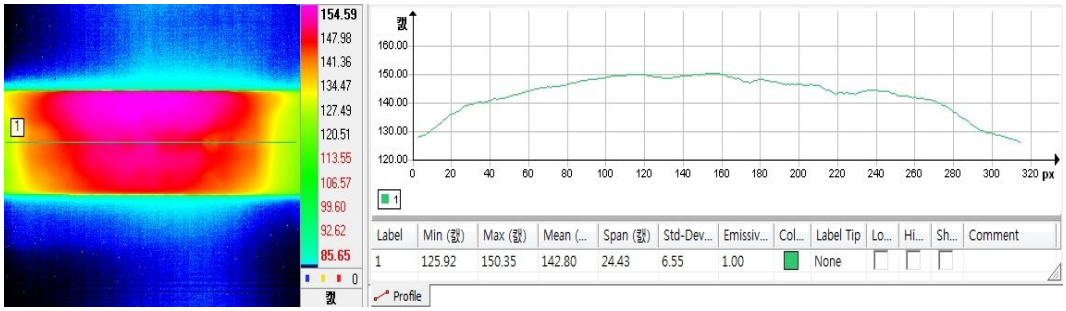

Fig. 14. Temperature distribution of inner heating device

As shown in Fig. 15, we configured the experimental equipment for the detection of wall-thinned defects inside the pipe that included an IR camera, fans, a pipe specimen, heating tape, a heating tape controller, and a PC. The experiment was conducted in a closed space while the temperature in the laboratory was kept constant at 25℃ using an air conditioner.

To describe the pipe of the NPPs that was under normal operation, the inner heating device was used to maintain the temperature of the pipe specimen at 150℃, whereas the distance between the pipe specimen and fan and the number of fans changed. The distance between the pipe specimen and the IR camera was fixed at 1m, while the distance between the pipe specimen and the fan was adjusted to 1m and 2m. In addition, the number of fans was adjusted to 1 and 2 and each experiment was conducted for 120 seconds.

Fig. 15. Configuration of experimental equipment using cooling device

E. Experiment Results

1. Heating Experimental Results

The experiment using the heating device based on simulation of the NPP's overhaul period was conducted as distance between a pipe specimen and halogen lamp was set to 1m and 2m because the results of a FEA simulation that when the distance was shorter, defects looked more distinct. Table 6 shows the condition of the experiment. Fig. 16 shows the experiment results when distance between a pipe specimen and halogen lamp was adjusted to 1m and 2m and intensity of the halogen lamp was set to 60%. According to the experiment results, a sharpness was lower in the site where depth of the defects was 50% of the thickness than in

the site where depth of the defects was 75% of the thickness. However, it was possible to confirm the defects with the naked eye that looked conspicuously.

Fig. 17 shows the experiment results when distance between a pipe specimen and halogen lamp was adjusted to 1m and 2m and intensity of the halogen lamp was set to 80%. According to the experiment results, it was possible to confirm the defects with the naked eye under all of the experiment conditions. It was also possible to clearly distinguish the defects in the site where depth of the defects was 50% of the thickness and where sharpness was low as intensity of the halogen lamp was up to 60%. In addition, a shape of defects was the most similar to actual shape of the defects.

According to the experiment results, the halogen lamp was able to detect wall-thinned defects inside the pipe. Furthermore, it was considered that the power of the halogen lamp should be 60% or higher and the distance between the pipe and the halogen lamp should be short such as 2m in order to detect wall-thinned defects inside the pipe during the overhaul period of the NPPs.

TABLE 6. Conditions of the experiment using a heating device

Heating source	Power of halogen lamp	Heating time	Distance between pipe specimen and halogen lamp
1kW halogen lamp	60%	60sec	1m, 2m respectively
	80%		1m, 2m respectively

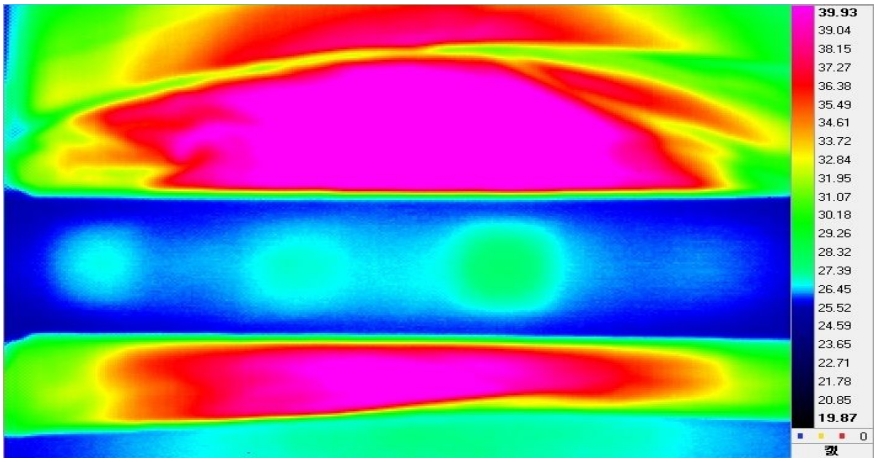

(a) distance of the halogen lamp from pipe specimen-1m

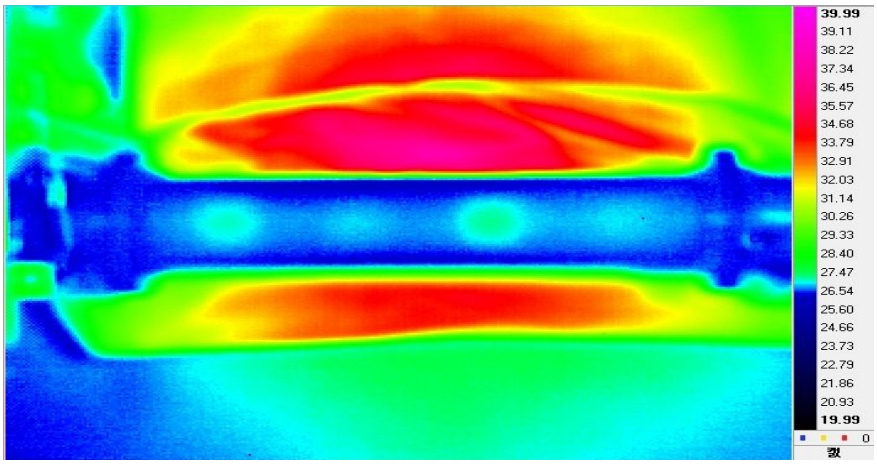

(b) distance of the halogen lamp from pipe specimen-2m

Fig. 16. 60% power of 1kW halogen lamp

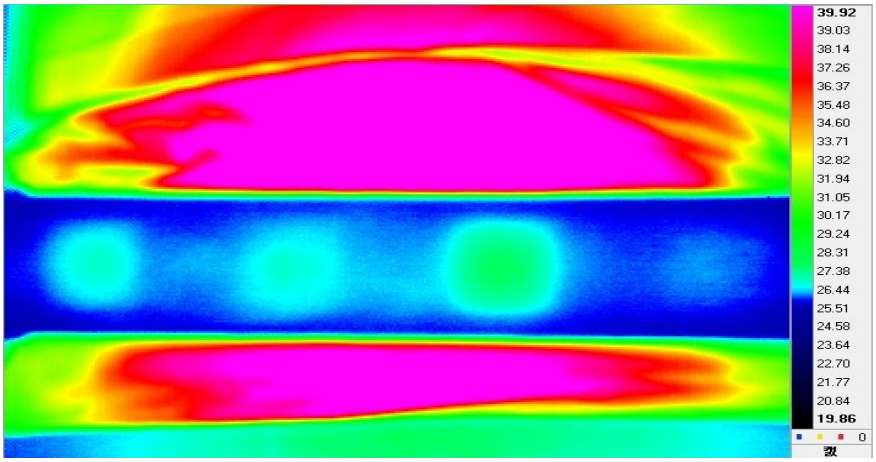

(a) distance of the halogen lamp from pipe specimen-1m

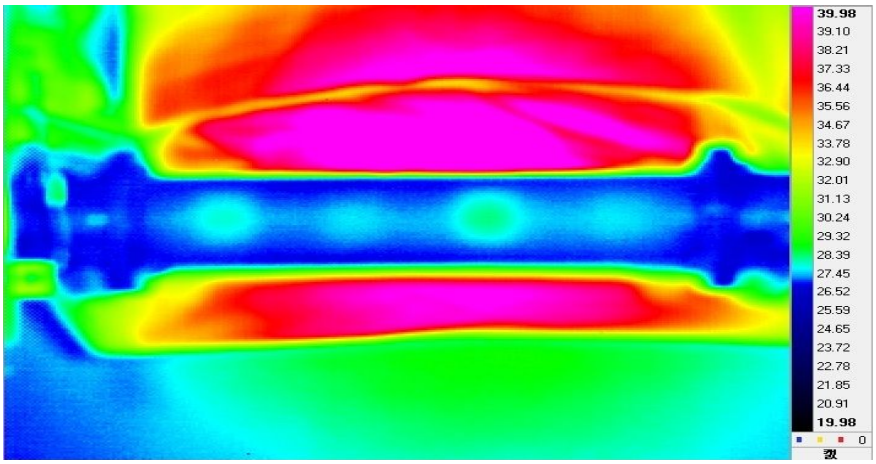

(b) distance of the halogen lamp from pipe specimen-2m

Fig. 17. 80% power of 1kW halogen lamp

2. Cooling Experimental Results

The cooling experiments for the detection of wall-thinned defects inside the hot pipe of the NPPs that were in normal operation was conducted at 150℃. An heating device was inserted inside the pipe specimen, which aimed at implementing a high temperature of the pipe specimen.

Fig. 18 shows the experiment results when a single fan was used with a distance between the pipe specimen and fan adjusted to 1m and 2m. The defects created up to a 75% depth inside the pipe specimen were detected at a distance of 2m. The defects were detected more clearly as the distance between the pipe specimen and fan became shorter.

Fig. 19 shows the experiment results when two fans were used to cool the pipe specimen at a distance of 1m and 2m. The defects artificially created with a 75% depth and 50% depth inside the pipe specimen could be detected. The defects were detected more conspicuously as the distance between the pipe specimen and cooling device became shorter.

According to the experiment results, the fan cooling device was able to detect defects inside a pipe specimen partially. Furthermore, it was considered that wind speed and air volume of the fan should be increased and distance between a pipe specimen and the fan should be short such as 1m in order to detect wall-thinned defects inside the pipe of the NPPs that was in normal operation.

TABLE 7. Conditions of the experiment using a cooling device

Cooling source	Fan	Temperature of pipe specimen	Distance between pipe specimen and fan
Fan	1	150℃	1m, 2m respectively
	2		1m, 2m respectively

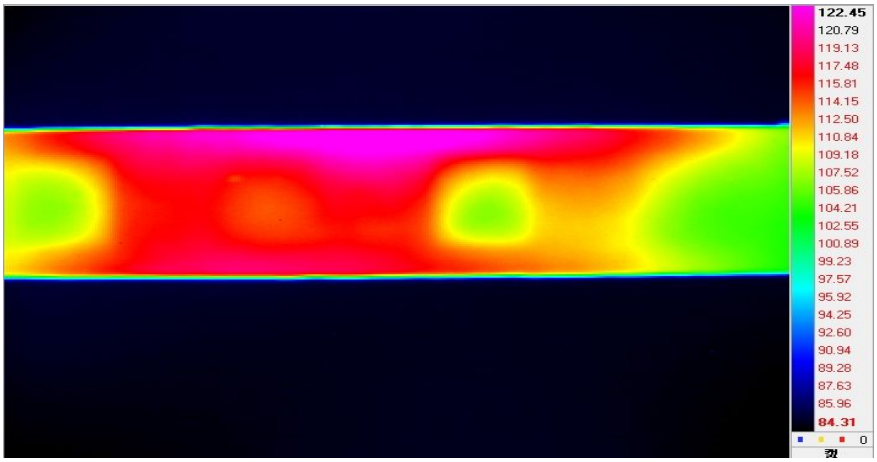

(a) distance of the fan from pipe specimen-1m

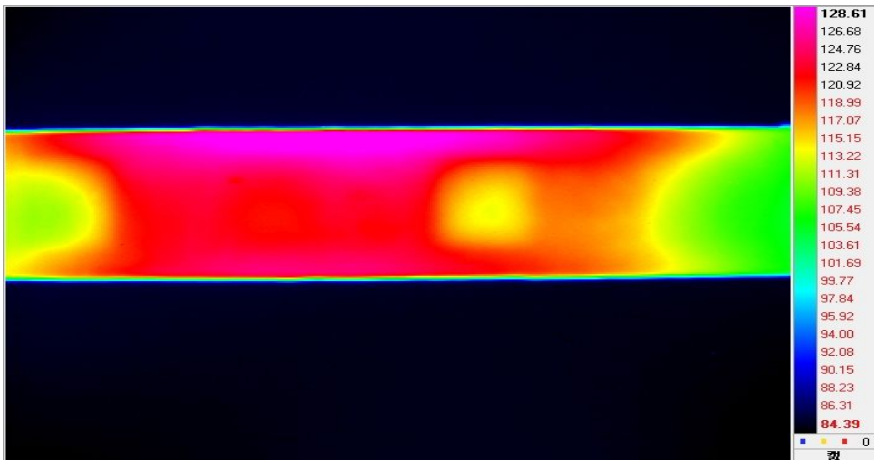

(b) distance of the fan from pipe specimen-2m

Fig. 18. Cooling experiment using 1 fan

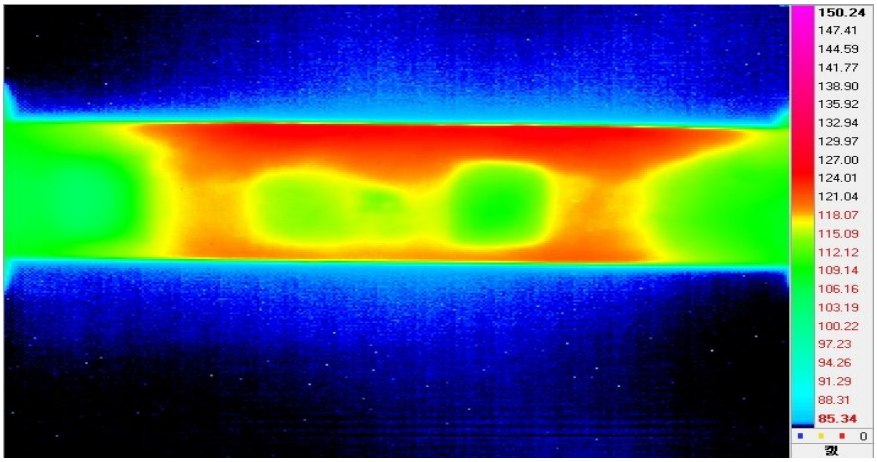

(a) distance of the fan from pipe specimen-1m

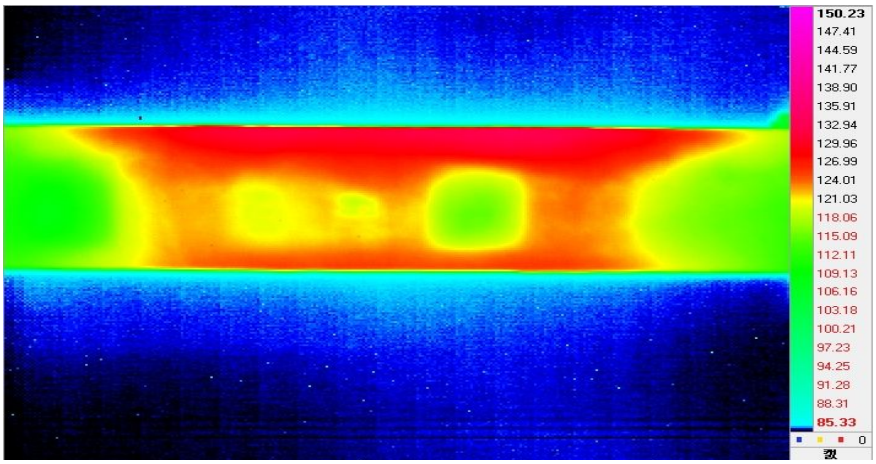

(b) distance of the fan from pipe specimen-2m

Fig. 19. Cooling experiment using 2 fan

Ⅴ. Conclusions

In this study, IR thermography was used to detect wall-thinned defects inside the pipes of NPPs that were in the overhaul period and normal operation. The pipe model and pipe specimen that had the same physical properties as those for the actual pipe of the NPPs were used for the FEA simulations and the experiments. Moreover, the size of the defects applied to the pipe specimen was equal to that of the defects applied to the pipe model for the FEA simulation.

Based on the FEA simulation results that aimed at investigating the heating effects of the heating device and the optimal experiment conditions, it was predicted that capability to detect defects increased as distance between the pipe and the halogen lamp was shorter and intensity of the halogen lamp was higher.

FEA simulation was conducted to examine the cooling effects of a cooling device and the optimal experiment conditions. The results predicted that the detection ability of defects increased with decreasing distance between the pipe and fan and increasing wind speed of the fan. The results were applied to subsequent experiments.

In the experiment using the heating device based on the FEA simulation results, defects looked more conspicuous as distance between a pipe specimen and halogen lamp was 2m and the power of halogen lamp was higher. The optimal experiment conditions for investigation of the wall-thinned defects in the NPP's pipe using the halogen lamp included the distance between the pipe and the heating device of 2m and the halogen lamp power of 60% or higher.

The defects could be detected partially in the experiment that was conducted using the cooling device of fans based on FEA simulations. Unlike the FEA simulation results, the defects with the 75% depth of the pipe thickness could be detected clearly when the distance between the pipe specimen and fan was 1m. To detect the wall-thinned defects in the NPPs that is in normal operation based on

such results, the distance between the pipe and fan should be short (e.g. 1m), whereas the wind speed and air flow of the fan should be high.

In conclusion, IR thermography enabled the detection of the wall-thinned defects inside the pipe and it was expected to be quite useful on the NPPs site compared to the existing NDI. Moreover, because IR thermography facilitates the maintenance of facilities of the NPPs that are in normal operation or NPPs that are in overhaul period, it is expected to maximize the operation efficiency of the NPPs facilities and minimize the energy loss and economic loss can be attributed to the operation stop.

References

[1] M. Frank, R. Hans, and S. Helmut, “Experience with piping in German NPPs with Respect to Ageing-Related Aspects”, Nuclear Engineering and Design, Vol. 207, No. 3, pp. 307-316 (2001).

[2] K. S. Kim, H. S. Chang, D. P. Hong, C. J. Park, S. W. Na, K. S. Kim, and H. C. Jung, “Defect Detection of the Wall Thinning Pipe of the Nuclear Power Plant Using Infrared Thermography”, Journal of the Korean Society for Nondestructive Testing, Vol. 30, No. 2, pp. 85-90 (2010).

[3] G. Shen and T. Li, “Infrared thermography for high-temperature pressure pipe”, Insight, Vol. 49, No. 3, pp. 151-153 (2007).

[4] P. K. Rastogi, D. Inaudi, “Trends in Optical Nondestructive Testing and Inspection”, Elsevier Science (2000).

[5] C. J. Hellier, “Handbook of nondestructive evaluation”, McGraw-Hill, 2nd Ed. (2001).

[6] A. Vageswar, K. Balasubramanian, C. V. Krishnamurthy, T. Jayakumar, B. Raj, “Periscope infrared thermography for local wall thinning in tubes”, NDT&E International, Vol. 42, pp. 275-282 (2009).

[7] S. V. Patankar, “Numerical Heat Transfer and Fluid Flow”, Hemisphere Pub. Co. (1980).

[8] H. D. Lee, “Thermal measurement theory using infrared camera”, Journal of KSNVE, Vol. 17, No. 3, pp. 31-34 (2007).

[9] X. P. V. Maldague, P. O. Moore, “Nondestructive Testing Handbook: Infrared and Thermal Testing”, Amer Society for Nondestructive, 3rd Ed. (2001).

[10] ANSYS, ANSYS 13.0 (Release 13.0), ANSYS Inc. (2010).

[11] Fluent, GAMBIT 2.1, Fluent Inc. (2003).

[12] X. P. V. Maldague, “Nondestructive evaluation of materials by infrared thermography”, Springer-Verlag (1993).

[13] Y. Y. Hung, R. E. Rowlands, and I. M. Daniel, “Speckle-shearing interfermetric technique: A full-field strain gauge”, Applied Optics, Vol. 14, pp. 618-622 (1975).

[14] Y. Y. Hung, “Digital shearography versus TV-holography for non-destructive evaluation”, Journal of Optics and Lasers in Engineering, Vol. 26, pp. 421-436 (1997).
[15] X. P. V. Maldague, “Infrared methodology and technology”, Gordon and Breach Science Publishers, Vol. 7 (1994).
[16] J. G. Kim, “Integrity Evaluation of Railway Bogie Using Infrared Thermography Technique”, Journal of the Korean Society for Nondestructive Testing, Vol. 31, No. 2, pp. 144-149 (2011).
[17] G. Busse, D, Wu, and W. Karpen, “Thermal wave imaging with phase sensitive modulated thermography”, Journal of Applied Physics, Vol. 71, No. 8, pp. 3962-3965 (1992).
[18] O. Wuand, G. Busse, “Lock-in thermography for nondestructive evaluation of materials”, Revue Generale de Thermique, Vol. 37, pp. 693-703 (1998).
[19] G. Gaussorgurs, “Infrared thermography”, Champman & Hall (1993).

감사의 글

지난 시간동안 집에 있는 시간보다 더 많은 시간을 보내며 나의 대학원 생활의 모든 추억이 담겨있는 CUNICL... 덩그런 연구실에서 홀로 석사 학위 논문의 감사의 글을 작성하고 있으니, 지금까지의 여러 추억들이 바로 어제처럼 눈앞에 아른거리고 만감이 교차합니다.

2년여 시간의 대학원 생활을 돌이켜 보니 후회와 연민의 나날이 먼저 떠오르는 것은 아마도 아쉬움이라는 감정이 많기 때문인가 봅니다. 비온 후의 땅이 더욱 단단한 것처럼 저에게도 거름과 같은 시간이었다는 것은 틀림없는 사실입니다. 교수님들과 선배님들의 지나온 길을 따라 걷기에도 부족함이 많은 저를 졸업 논문의 마지막을 작성하고 있는 지금 이 순간까지 올 수 있도록 이끌어 준 것은 바로 '인연'이었습니다. 지난 2년여 시간동안 닿았던 '인연'으로 지금 이 시간을 만들어준 모든 분들에게 감사의 마음을 전합니다.

먼저 이 논문을 완성하기까지 모르는 것도 많고 한없이 부족한 저에게 따뜻한 관심과 엄한 꾸지람으로 여느 대학의 대학원생들과 비교하여도 손색이 없도록 수많은 경험과 사회생활을 경험할 수 있도록 가르침을 주신 저의 영원한 스승님, 나만균 교수님께 머리 숙여 깊은 감사를 드립니다. 항상 모든 제자들이 잘 되도록 챙겨주시며 변함없는 모습으로 학문연구에 매진하시는 그 사랑과 열정을 존경하고 영원히 마음속에 간직하면서 자랑스러운 제자가 될 수 있도록 노력하겠습니다. 그리고 바쁘신 와중에도 귀중한 시간을 내시어 상담을 하며 많은 조언을 해주시고 김승평 교수님, 정운관 교수님, 이경진 교수님, 송종순 교수님, 김진원 교수님, 모든 교수님들께 진심으로 머리 숙여 감사드립니다. 원자력분야의 현장에 대한 실무적인 강의와 삶의 이야기를 들려주시며 격려 해주신 이기복 교수님, 박부성 교수님, 노재만 교수님, 박병주 교수님, 이두정 교수님께도 진심으로 감사의 말씀을 드립니다.

같이 오래 생활하지는 않았지만 CUNICL에 들어올 수 있게끔 조언과 격려를 해준 성한이형, give & take를 좋아하고 하나라도 더 알려주려고 노력하던 동수형, 모르는 것이 많아 같이 프로젝트를 수행하면서 답답함을 느꼈을 영규형, 친 동생처럼 생각하

면서 챙겨주고 에너지가 넘치는 심원이형 모두 졸업하셨지만 형들의 관심과 배려로 지금의 제가 있다고 생각합니다. 감사합니다. 그리고 명절이나 스승의 날에만 볼 수 있는 영록이형, 선호형, 동원이형, 인준이형, 인호형, 헌영이형, 동혁이형 항상 짧은 시간의 만남이지만 많은 조언과 격려 감사합니다.

현재 연구실에서 같이 생활하고 있는 식구들. 대학원 동기라고 같이 장난도 치고 세심하게 하나하나 챙겨주는 실장 재환이형. 신혼여행 잘 갔다 오고 행복하게 사세요. 나의 고민을 상담해주고 실험조교 업무에 바쁜 순데렐라 순호형. 항상 옆에서 도와줘서 고맙고 열심히 하는 것보단 잘 하는 것이 중요하다는 것 알고 있으리라 믿어요. 나이로는 나보다 많지만 연구실 막내인 막내 같지 않는 쾌환이형. 같이 일하면서 나 때문에 기분 상한일도 많았을 텐데 열심히 해 줘서 미안하고 고마워요. 그리고 같이 대학원에 입학해서 동기이자 형으로써 항상 힘이 되어주는 대섭이형, 마무리 잘 해서 좋은 결과 있길 바랍니다. 모두 정말 고마워요.

대학원 생활을 하면서 조언도 많이 해 주고 힘들 때 술한잔으로 위로해 주던 동위원소실험실의 유선이형, 정민이형, 선동이형, 열수력실험실의 용진이형, 한이형, 현석이형, 하임이, 정하, 핵주기실험실의 강일이형, 상헌이형, 민영이형, 태빈이, 영국이, 현민이, 기계재료실험실의 민수형, 사용이, 성재, 미연이, 회열이, 기현이, 학과실 지현이, 현윤이 모두들 고맙고 감사합니다. 또한, 같이 학부 생활을 같이 하며 졸업할 때까지 동고동락한 내 동기들 동수, 민호, 철주, 재철, 주현, 인철, 해성, 진옥, 승기, 홍수, 기효 그리고 선·후배들 병진이형, 기현이형, 재수형, 수열이형, 경주형, 경준이, 세훈이, 성희, 슬이 등등 한 번도 말하지 못했지만 나의 힘이 되어주어서 고마웠습니다. 그리고 형의 부탁은 모두 들어준 후배들 건필, 익현, 경훈, 백주현, 명락, 학주, 위, 창수, 도준 모두들 항상 잘 따라줘서 고맙다. 이 외에도 미처 이름을 언급하지 않은 선·후배, 동기들에게도 고마운 마음을 전합니다.

항상 친구라는 행복감을 안겨주고 함께 울고 웃으며 10년이 넘는 시간을 함께해준 친구들 낙훈, 지훈, 태현, 경수, 용진, 진희, 유영, 낙현, 현우, 승연, 준민, 영훈, 설아 등등 정말 고맙고 앞으로 남은 평생 동안 서로 의지하고 잘 지내보자.

바로 이 분들과의 '인연의 실'이 저를 이끌었고, 그리스로마 신화의 테세우스처럼 어둔 미래라는 미궁으로 나아갈 수 있는 힘이었습니다. 때로는 마음처럼 되지 않는 일들

과 보이지 않는 앞날에 지칠 때도 있었습니다. 그때마다 이 '인연의 실'이 앞으로도 저를 이끌어 주리란 것을 저는 믿어 의심치 않습니다. 언제나 감사합니다.

또한, 지금의 저를 있게 해 주신 저의 영원한 버팀목이자 저의 모든 것인 아버지, 어머니, 누나에게 머리 숙여 감사의 말씀을 전합니다. 물질적인 후원이 아닌 정신적이 후원이야 말로 근간의 저를 지탱할 수 있었던 힘의 원천이라 확신할 수 있습니다. 쑥스러움에 직접 말하지 못했지만 사랑합니다. 누구에게나 자랑스러운 아들이자 제자, 동생, 후배, 동기, 선배가 될 수 있도록 앞으로도 항상 과거를 잊지 않고 앞으로 나아가기 위해 노력하는 사람이 되겠습니다.

2013년 6월

CUNICL에서...

김 주 현